CONSTRUTEC

30 YEARS

The smartest solutions for ductile iron hydraulic engineering: Lok&Play®

Penstock for small hydroelectric power plants

Drinking water: high pressure pipeline system

Installations in high mountain areas

Trenchless technology

CONSTRUTEC

“30 years
of innovative solutions”

We design, supply and advise execute hydraulic engineering solutions using the leading technology in ductile cast iron pipe systems.

We improve the profitability of our customers’ investments and **help in the development** of regions and countries by making sustainable, pioneering and environmentally-friendly infrastructures possible.

We have the most complete programme of Lok&Play® ductile iron pipes and fittings available on the market with a diameter from 100 to 1600.

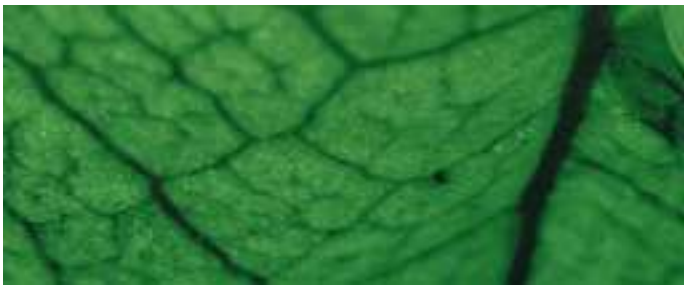

We have a **team of professionals** that are highly qualified, experienced and expert in their fields of action.

We offer our customers **high technology products** applied to fields where performance and profitability are maximised.

In addition, we offer a **creative vision** of how to face the different challenges that may arise in a project.

We create technological innovation processes in collaboration **with leading worldwide manufacturers** to provide value-added solutions in specialised industrial processes.

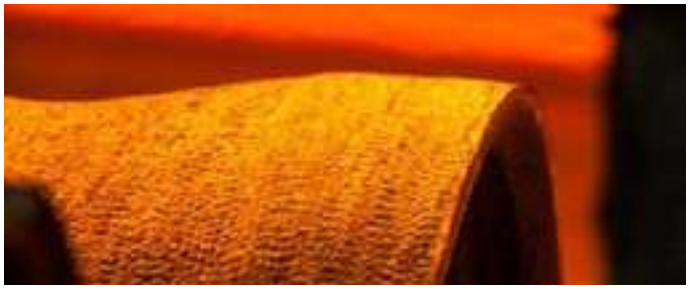

We accompany you throughout the **life cycle of the project.** From design to operation.

We are...

Sustainable

"Commitment that allows us to grow"

From the manufacturing process to the design of our solutions, we seek **commitment to the environment**.

The use of **recycled materials** without pollutants or chemical additives of the ductile iron products is aimed not only at meeting the highest health and ecological standards but also at **helping to reduce the environmental impact**.

For this reason, we work on a day to day basis on developing innovation techniques and on the evolution of the management of renewable energies. **Because "sustainability" is not just a word, it is a commitment that allows us to grow**.

Innovators

"Pioneering solutions that deliver benefits"

R&D&I is the basis of our business and this is immediately evident in the quality of our personnel and the high technological level employed in the design and manufacture of all our products.

R&D&I in production processes, in the products, their logistics and their fields of application.

We always seek to be the first to offer innovative solutions that bring benefits to each of our customers' projects.

Quality

"Today's responsability will determine tomorrow's needs"

The quality of infrastructures, both hydraulic or otherwise, will determine their durability and efficiency.

At Construtec **we offer the best solutions in the market** both in terms of the materials of our products and the services we provide.

All of our solutions are of internationally approved quality and have the relevant certifications.

Profitable

"Technology and quality as an investment for the future"

Our solutions undergo the most demanding tests to certify their **strength and durability** according to their uses.

We guarantee a long service life and minimal long-term maintenance costs.

Committing to Construtec is committing to technology and quality as an **investment for the future.**

Versatile

"We make complex problems viable"

Functional safety, cost effectiveness and the advantages of its wide range of applications are the main criteria to be followed when selecting ductile iron pipe for a pipeline.

At Construtec **we offer a multitude of solutions** to satisfy the particular needs of any project.

Engineering Services

*We have come a **long way in the development of hydraulic solutions**, such as penstocks for small power plants, high pressure drinking water pipelines in hard-to-reach areas and/or trenchless technology applications.*

PROJECT MANAGEMENT

High-tech engineering solutions and services that cover the entire life cycle of the project to solve the most complex needs.

PLANNING & DESIGN → EXECUTION & CONTROL → START-UP

1/ **Planning and design**

A set of documents and calculations required for defining the project is generated in this phase.

- Feasibility studies and analyses of alternatives,
- Definition of scope, costs and schedule,
- Optimal solution,
- Layout,
- Economic diameter,
- Materials and sizing,
- Head losses and water hammer,
- Auxiliary structures,
- Operating and control elements,
- Production,
- Geotechnical and structural stability.

2/ **Execution and control**

We help keep **risks under control**.

- On-line and on-site technical assistance,
- Implementation control,
- Project management.

3/ **Start-up**

Includes field work providing **training, supervision and validation services**.

- Final check,
- Leakage and pressure tests,
- Commissioning.

The key: Know-how, Capacity and Success

Procurement

*"**We make the impossible** possible"*

__Premium__ quality and technology

Technical office

Our ATD (*Application Technology Department*) provides added value proposals based on experience and knowledge.

- Analysis of the project documentation,
- Creation of alternatives (layout and construction solutions),
- Advice on construction methods, on-site installation, specific anchoring.

On-site assistance

- Training of the installation team and supervision of the assembly of the first section.
- Advisory and control visits during the execution (number to be determined based on mileage and the difficulty of the project).
- Control of pressure tests.

Detailed engineering

On request, **we will carry out any part of your drinking water or small hydro power plant project**, including preparing preliminary information (detailed cartography, hydrological studies, geotechnical studies, etc.).

Products

We supply the most extensive programme on the market and we are committed to the highest quality. To this end, we have established long-lasting partnerships with market leading brands and manufacturers. They accompany us in the challenge of tackling innovative, profitable and sustainable projects and, in turn, drive their development, growth and the improvement of their competitiveness in new markets and special applications.

Transportation logistics

Our objective is to **improve the profitability of our customers' projects** by supplying the most advanced products that are best suited to their needs in the most efficient way, in the place and at the time they request.

Our own Logistics Department with more than three decades of experience in managing international shipping offers:

- Immediate quotes for supplying under CFR conditions (Incoterms 2010),
- Full traceability of the supply chain,
- Personalised communication.

Three decades of experience

High Tech Solutions: **Lok&Play®**

"We make the most
complex problems viable"

High pressure *pipeline systems*

A lifetime
of high pressure solutions

CONSTRUTEC

Small Hydroelectric Power Plants

Main solutions

Penstock

Lok&Play®,
four decades of
constant evolution

- Does not require anchor blocks. No expansion joints.
- Very high installation ratio: Lok&Play®.
- Very complex areas. Extreme slopes.
- Admits very high pressures.
- With or without trench.
- No welding, no problems. Even in a flooded trench.
- Minimal pressure head losses.
- Guarantee of operation, without breakages or interruptions in service.
- Replacement of obsolete steel pipes.

SAMUC hydroelectric plant

Located in the Alta Verapaz area in Guatemala, the SAMUC small hydroelectric project has **two pipelines that end up in the same machine room**: the SAMUC I DN 400 pipeline and the SAMUC II DN 600 pipeline. Both were constructed with a cable crane transport system due to the complex installation conditions of the pipes.

Supply

In the case of SAMUC I, the entire penstock was built with a **DN400 locked pipe in bitumen** –the optimum diameter for this project– which covered sections of different pressures up to a maximum allowable pressure of 52 bar.

In this pipeline, there are slopes of 480% (78°) –almost vertical conditions in some cases– so it was carried out using a cable crane transport system.

Keys to the success of the project

- **Make an impossible project viable, safe and profitable**.
- **Advising and checking** until final pressure testing by the design team.

Success story

SAMUC I

Typology
Low and high pressure pipeline systems

Location
Cobán
Alta Verapaz, Guatemala

Lenght
1.753m

Laying in high mountain areas

Main solutions

Siphon Pipelines

*“**Off Road**: a smart, safe and cost-effective solution for extreme pipelines”*

Applied engineering with *Lok&Play*® combining the restraint longitudinal capacity of the connection system with high pressures and extreme installation conditions.

- Very complex scenarios with steep slopes.
- With or without trench.
- No concrete blocks.
- Internal and external corrosion protection for all types of water and soil.
- Earthquake resistant.

The “Los Arrudos” pipeline

It is one of the main supply lines of drinking water in Gijon (Asturias, Spain). Water is carried to the city through a long route of valleys and hills in the Cantabrian Mountains. The breakage rate had become very high in recent years, which made it advisable to replace the long pipeline quickly, section by section.

”El Sifón del Alba”:
1.884m of high pressure and slopes

This was **one of the most complicated line section and concentrated most of the breakages**. The high pressure, which reaches a maximum allowable pressure of 65 bar at its lowest point, combined with the steep slope (of about 554 m) made its maintenance an extreme sport.

Key points for project design and product selection

- **Need for an agile assembly** that would counteract the extreme conditions of the environment.
- **Poor accessibility of the site** that led to the use of a helicopter for pipe handling during installation.
- **Environmental importance of the area**, which is why the finished line included fully covering the pipeline and replanting the affected area for better landscape integration.

Success story

“El Sifón del Alba” Pipeline

Typology
High Pressure
Drinking Water Pipeline

Location
Soto de Agües
Asturias, Spain

Lenght
1.884m

High pressure water supply

*“**Guarantee of operation**, without long-term maintenance or interruptions in service”*

Experts *in very complex scenarios*

- Withstands very high pressure.
- Buried or above ground laying.
- Earthquake resistance solutions.
- No welding means no fire risk.
- International certificates for drinking water supply.

Drinking water for the next 100 years

The inhabitants of **El Socorro** have spent years dreaming of a **definitive solution to the problem of drinking water supply**. A solution made possible by the **advanced Lok&Play® ductile iron technology** with a locked system for DN 250 and DN 300 to cope with a pressure of up to 85 bar. The system provides constructive benefits, such as **the elimination of thrust concrete blocks in direction changes and adaptability to the terrain**.

A true challenge: 17.5km

This 17.5 km long drinking water pipeline is **quite a challenge for Colombian hydraulic engineering and is expected to be completed by mid-2018**.

Key points of the project

- **Making a complex project viable**.
- **Providing the best solution** for drinking water supply, sustainable and long casting.
- **Supervision and control** by our own team.

Success story

Acueducto de El Socorro

Typology
High Pressure Drinking Water Pipeline

Location
El Socorro
Santander, Colombia

Lenght
17.5km

Trenchless technology

Engineering *for* ***trenchless pressurised*** *pipelines*

- Different techniques: relining, bursting and horizontal directional drilling.
- The pulling force capacity allows big lenght installations in one go.
- Maximum savings compared to other techniques.

A project with a worldwide impact

Alzira, a small town near Valencia, was the beneficiary of a **unique horizontal directional drilling (HDD) project** using DN 900 PHD-type ductile iron pipe with a 25 bar design pressure.

Horizontal directional drilling:
456 m of buried pipeline with large-diameter pipe

Part of the route of the new pipeline, with a nominal diameter of 900mm **for the supply of drinking water to the Ribera region**, involved crossing the River Júcar, the Valencia - Alicante railway line and an industrial building. It was not possible to use the traditional trenched method due to its effect on the railway line

and it was not feasible to use a nearby viaduct to install the pipeline for structural reasons. For all these reasons, **it was decided to build an underground pipeline** with a total drilled length of 456m.

Interesting alternative technic

The installation of a ductile iron pipeline by means of the horizontal directional drilling (HDD) method with Lok&Play® joints is **technically feasible, even in the dimensions illustrated here**, and is an interesting alternative to other installation methods in economic and environmental terms.

Success story

Cruce del Río Júcar

Typology
Trenchless technology
Horizontal directional drilling

Location
Alzira
Valencia, Spain

Lenght
456m

Other success stories

"We provide solutions that guarantee the ***supply of water to areas where construction is highly complex****"*

Francisco Dominguez Siemens,
Construtec General Manager

“Engineering is not just designing: it’s ***going forward”***

Alberca Bridge

Location
Lorca, Spain

Year
2011

Resistant to: Earthquake (2011)
Flood (2012)
Diameter: DN 500

Hydropower Plant of Itxalito

Location
Guatemala

Year
2014

Pressure: 30 bar
Slope: 87%
Diameter: DN 700

Hydropower Plant of Bajos del Totuma

Location
Panamá

Year
2015

Pressure: 30 bar
Slope: 100%
Diameter: DN 1000

Hydropower Plant of SAMUC II

Location
Guatemala

Year
2016

Pressure: 30 bar
Slope: 148%
Diameter: DN 600

Hydropower Plant of Xolhuitz

Location
Guatemala

Year
2016

Pressure: 25 bar
Slope: 90%
Diameter: DN 800

Material

The alloy of iron, carbon and small amounts of magnesium such that it precipitates spheroidal graphite is known as **Ductile Cast Iron (DCI)**. This gives the material a much higher toughness and deformation capacity before breakage than other castings and steels.

Ductile Cast Iron (DCI)

Ductile cast iron is an **innovative material**, which has characteristics that make it exceptional and essential for transporting drinking water.

Ductile is equivalent to **mouldable**: it can be bent thanks to its structural composition, which makes it a **very strong material**.

Ductile cast iron is also **practically free of free graphite**. In contrast to grey cast iron, which is composed of free graphite in its laminar form, it contains graphite spheres that have a positive influence on the characteristics of the primary structure, thus increasing its strength, which is a major advance over traditional grey cast iron.

The ductile material is not at all brittle and is therefore ideal for pressurised pipelines. Some of the physical properties include:

- Minimum tensile strength: 420 N/mm2
- Minimum elongation before break > 10%
- Compressive strength 550 N/mm2
- Conventional yield point at 0.2% (300 N/mm2)

Quality is certified from the chemical analysis of raw and auxiliary materials up to the shipment of the finished product. Quality is internationally approved to **ISO 9001** y **NSF/ANSI 61** standards, which accredit all of our products.

Cast iron pipes and fittings are subjected to a multitude of quality controls; raw materials, manufacturing processes, both internal and external visual inspections, water tests, specific pressure tests... For one purpose only: **to offer you the best product on the market**.

Certifications

The **U.S. Pipe Quality System** is certified in accordance with the *QualityPlus!TM Certification Program* of the **NAPF** (National Association of Pipe Fabricators) to which it belongs. This certification programme, which is endorsed by NSF International, ensures that all products meet the necessary standards for commerzialization and implementation. In short, a product manufactured with technology and rigour to meet the highest demands.

In addition, at the termination of the supply, at Construtec we provide a test certificate with metallographic results and pressure tests with each order, in accordance with the applicable international standards.

U.S. PIPE

Construtec's alliance with U.S. Pipe is a commitment to the highest quality and technology

American quality

U.S. Pipe, founded in 1899, was **one of the first manufacturers to embrace ductile iron pipe** in the mid 1960s, and it is now the industry standard for water and wastewater systems.

A leader in the industry, it bases its philosophy on the principles that the company established more than a hundred years ago: **innovation, service and quality**.

For an efficient, sustainable water supply

The commitment to present and future well-being has promoted **the alliance between Construtec and U.S. Pipe**, as a result of a new awareness of the importance of high quality hydraulic solutions.

Towards a sustainable future

Tyton Joint Locking Solutions (TLS)

The Tyton Joint® was invented by US Pipe in 1956 and has been the basis of the industry's technological development. It has been the common element in the main innovations of high-performance, bolt-less double chamber restrained joints developed by many manufacturers, mostly European.

Construtec-US Pipe offers **Lok&Play® solutions** with diameters from 100 to 1600 mm, manufactured in accordance with **ISO 2531 standard** and the design and testing rules in the **ISO 10804 standard**.

US PIPE also has a **complete range of ductile iron pipes and fittings** manufactured according AWWA standards in imperial sizes, providing the widest range up to DN1600/64" in the international market.

· Deflection up to 5º

· Working pressure up to 100bars (1450psi)

· Tractive force up to 10700KN

· Complete range of Lok&Play® fittings

TR FLEX®

· Restrained Joint Pipe with easy assembly/disassembly

· Flexible restraint

TR FLEX®
Joint diagram

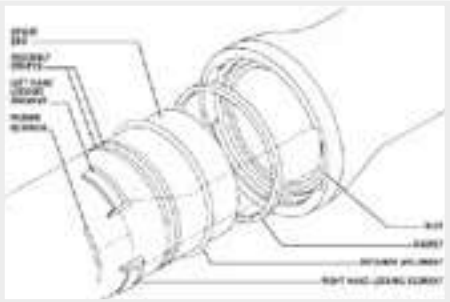

From DN 100 to DN 500

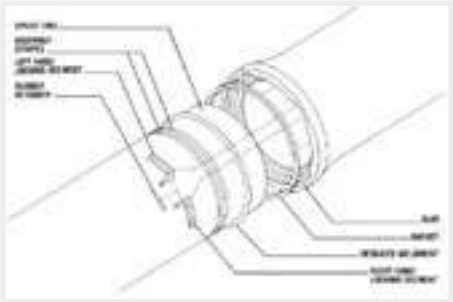

From DN 600 to DN 900

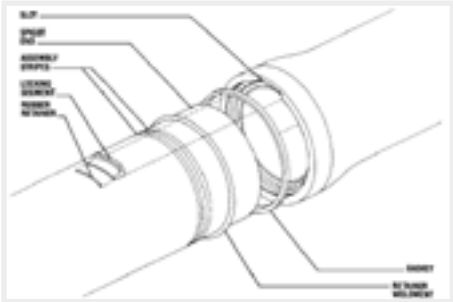

From DN 1000 to DN 1200

HP LOK®

· HP LOK® Restrained Joint Pipe and fittings provide flexible push-on joints.

· Working pressure rating of 29bar

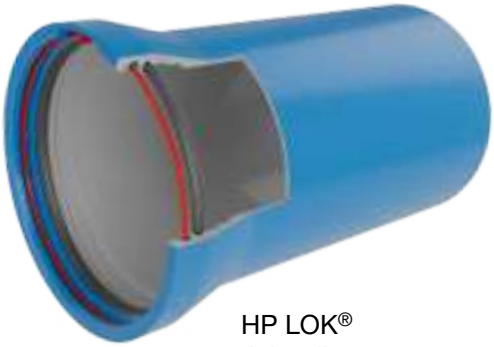

HP LOK®
Joint diagram

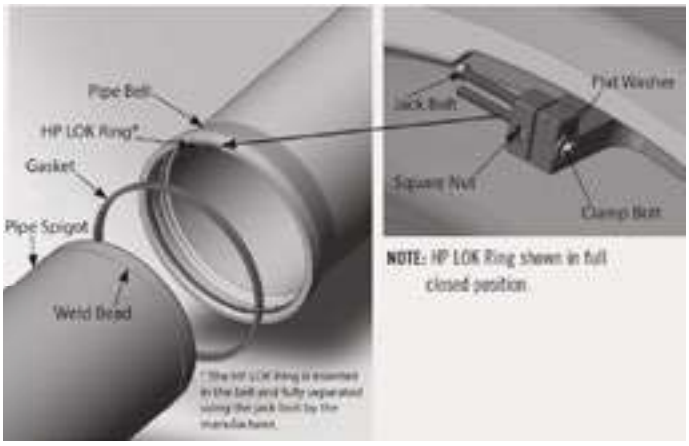

From DN 1400 to DN 1600

TR-XTREME®

· Designed for areas of seismic activity and unstable ground conditions.

TR-XTREME®
Joint diagram

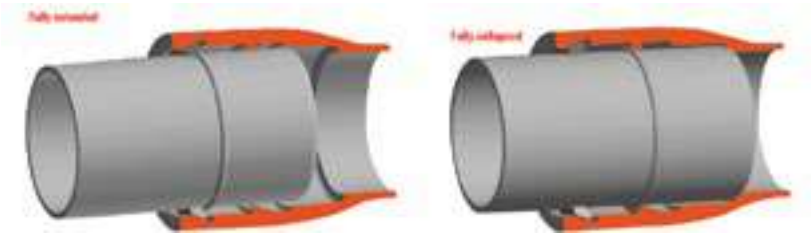

HDSS®: **NEW**

· High deflection high pressure restrained system.

· More pressure. More deflection.

HDSS®
Joint diagram

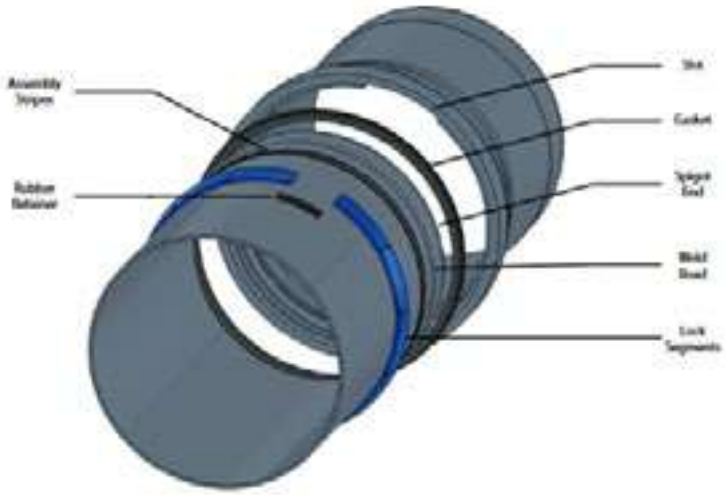

Coming soon under ISO 2531. From DN 100 to DN 1600.

Internal Lining

The internal lining is **the key to preventing a chemical attack by water** on the pipe. In addition, it must be able to withstand the abrasion of suspended particles. And, very important, its roughness must be low to offer little resistance against the water flow, minimising head losses.

Our pipes are inside lined with a compact, **resistant layer of cement mortar, in accordance with ISO 2531 and EN 545 applied in accordance with ISO 4179**.

Depending on the composition of the water to be transported, **a Seal Coat finish is also available**, which extends the range of use to acidic water with a pH greater than or equal to 4.

"Always
the best alternative"

Other possible internal linings

We have other options on request such as the ceramic coating *PROTECTO 401™*, *CERAMAPURE PL 90* or the ceramic glaze *Glass Lining*.

· **PROTECTO 401™**. Designed to protect cast iron pipes for sewer networks, offering a reliability similar to cement mortar in drinking water pipelines but incorporating the excellent chemical resistance of a novalac epoxy and slowing bacterial growth. High resistance to abrasion makes it ideal for use in slurry pipelines.

· **CERAMAPURE PL 90**. A two-component chemically cured epoxy anti-corrosion lining certified for use in drinking water and suitable for use in wastewater treatment plants, gravity or pressure sewers, raw water, irrigation, desalination plants...

· **Glass lining**. Specified to mitigate accumulation, obstruction, deterioration and corrosion in fatty systems with a high solids content, such as sludge or slag transportation systems. It provides high energy efficiency due to its low friction coefficient.

Ceramic glaze *Glass Lining*

“Internal mortar lining: ***guaranteed protection against corrosion”***

Chemical Alliance

One of the surprising advantages of the internal mortar lining is that it is not only an obvious PHYSICAL protection, but also a CHEMICAL protection, as described in the figure below.

Passivation Layer
Contact with water generates a stable layer of iron hydroxide Fe (OH)3 which protects the iron from corrosion.

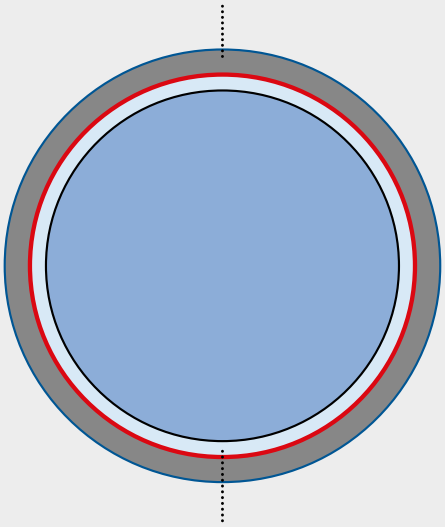

Alkaline Reaction and Clogging
Cement is porous and gets soaked with water. The calcium in cement reacts with the bicarbonates in water by precipitating calcium carbonate CaCO3, which tends to close the pores, preventing the flow of water into the cement.

Roughness

The mortar cement lining is applied in the factory by centrifugation. As it is cured in plant under controlled conditions, its low roughness and resistance to impact and abrasion is ensured.

The resulting roughness is extremely low compared to any other material.

Absolute roughness: ≈ 0,030 mm

C (Hazen-Williams): ≈ 140

n (Manning): ≈ 0,0088

Head losses

Head losses in the pipeline are reduced to a minimum. In addition, there is no degradation over time, as in other materials. Moreover, it is completely immune to biological attack and has unbeatable performance against thermal stress.

Outside Coating

An appropriate outside coating is **the key to preventing chemical attack from the soil**, which can corrode a pipeline in a few years, resulting in high maintenance costs and service interruption. There are soils with different degrees of aggressiveness, both physical and chemical, and it is necessary to adapt to them.

Pipes are **coated with a zinc layer with a bitumen finishing coat in accordance with the ISO8179 standard**, specified for most soil corrosion levels.

"Protection *against any adversity"*

Extreme conditions

If greater protection is required for burial in extremely aggressive conditions, **an additional V-bio® polyethylene sleeve coating is also available** which, in accordance with the EN545 standard, makes burial possible in all types of soil.

This combination favours the anti-corrosive properties of zinc and generates biocidal environmental conditions that **maximise the protection of the pipeline against corrosion**.

Self-healing effect

The zinc coating reacts chemically by healing surface damage. Zinc, which is more anodic than ductile iron, generates an electrochemical cell in the presence of soil moisture. **Zinc ions pass through the porous coating and produce a zinc film that covers the damaged area**.

Healing mechanism

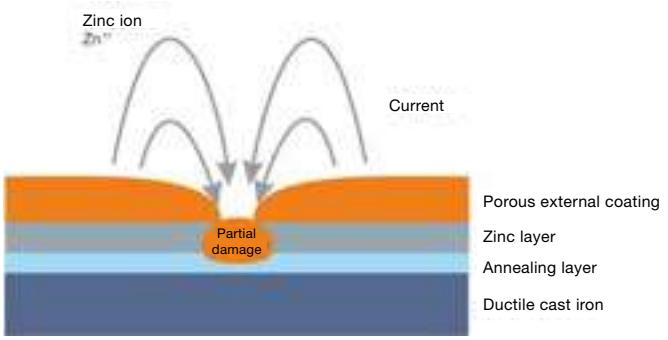

Special applications

WARRIOR 100 *by INDURON*

Warrior 100 external coating is an **epoxy coating free of solvents and ultra resistant**. It is suitable for applications where high resistance to impact, abrasion or extreme protection against external corrosion is required.

A protective solution particularly specified for extreme operations, such as the application in trenchless technology. *Warrior 100* is the best solution for both horizontal directional drilling and bursting.

Warrior 100 external coating

Lok&Play®

High tech ductile iron pipe system

No welding. Boltless. No anchor blocks

High performance for pressure pipelines

construction in mountainous areas

This is a commercial brochure so its technical information is not guaranteed.
For any specific application please contact our Technical Department (tecnico@construtec.com)

CONSTRUTEC

Tel. (+34) 946 612 640 **(Spain)**

www.construtec.com
info@construtec.com